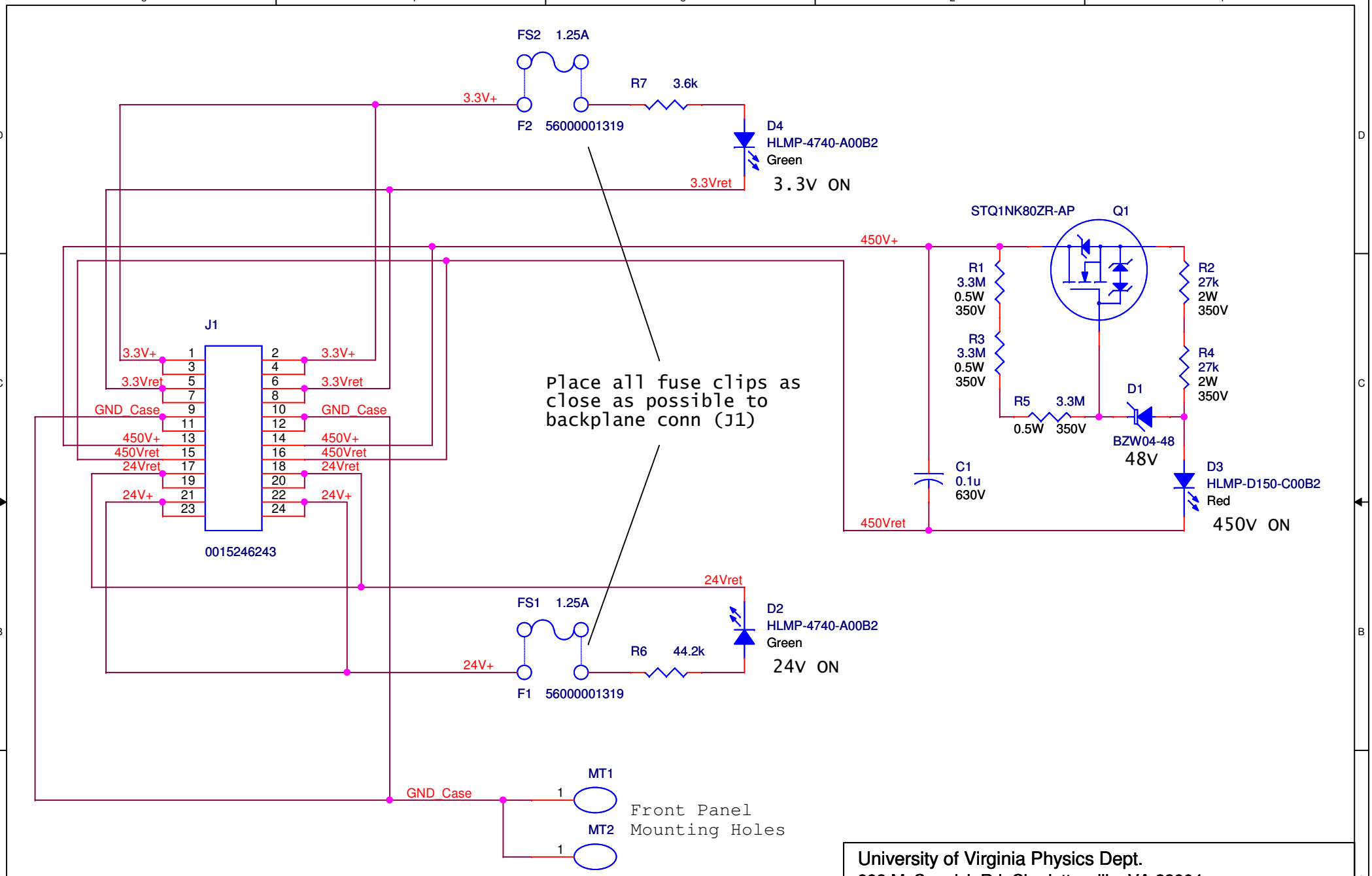

University of Virginia Physics Dept.
382 McCormick Rd, Charlottesville, VA 22904

Title
PDB Indicator Card for NOvA Project

Size	Document Number	Rev
A	<Doc>	3.1

Date: Tuesday, October 20, 2009 Sheet 1 of 2